Model: MGR-080

AIRMSEN

MEAT GRINDER

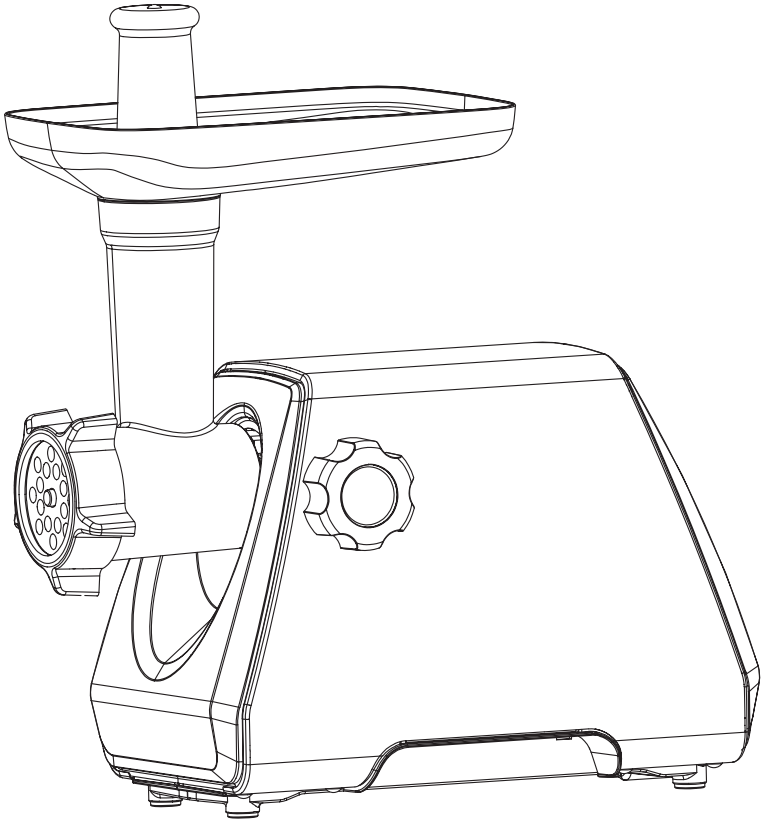

USER MANUAL

If you are having problems using this meat grinder.
Please email : **service@airmsen.com** or call **1-844-725-2333**
for assistance : **www.airmsen.com**

To best serve you, our AIRMSEN Representatives are available to answer your calls:
Monday to Friday, 8:00 AM - 10:00 PM EST
Saturday and Sunday, 9:00 AM - 5:00 PM EST

THANK YOU FOR MAKING AIRMSEN APPLIANCES A PART OF YOUR HOME.

CONSTANT INNOVATION TO ALLOW CONSUMERS TO GET BETTER PRODUCTS

Take “technology, innovation, health” as its core value, to be the preferred brand of household products in your healthy and quality life.

AIRMSEN focus on researching, developing and manufacturing various kinds of household supplies with advanced technologies and the idea of sustainable development, to promote the evolution and transform of our lifestyle, to make it more healthy, green, intelligent and with high quality, and to bring a happy, healthy and eco-friendly home life to around the world.

SAFETY

Your safety and the safety of others is very important.

We have provided many important safety messages in this manual and on your appliance. Always read and obey all safety messages.

⚠ WARNING **This is the safety alert symbol.**
This symbol alerts you to potential hazards that can cause serious injury to you and others.

All safety messages will follow the safety alert symbol.
All safety messages will tell you what the potential hazard is, tell you how to reduce the chance of injury, and tell you what can happen if the instructions are not followed.

CONTENTS

IMPORTANT SAFEGUARDS 04

COMPONENT INTRODUCTION 05

ASSEMBLY OF THE MEAT GRINDER 06

ASSEMBLY OF THE “KUBBE” ATTACHMENT 07

ASSEMBLY OF THE SAUSAGE ATTACHMENT 07

ASSEMBLY OF THE TOMATO JUICER ATTACHMENT 08

ELECTRICAL CONNECTION 08

APPLICATION INSTRUCTIONS 09

CLEANING AND MAINTENANCE 09

WARRANTY 10

CUSTOMER SUPPORT 11

TECHNICAL PARAMETER

Model	Dimensions (Accessories Not Included)	Power Voltage	Power
MGR-080	27.5x14.8x19.5CM	120V, 60Hz	Max. 800W

IMPORTANT SAFEGUARDS

Congratulations on your new Airmsen meat grinder. This manual contains important information on the installation, use, and care of your appliance. Please take time to read this manual to take full advantage of your meat grinder's many benefits and features.

Please read this manual carefully before using the product and keep it properly.

The product, accessories, user interface and other illustrations in the manual are schematic diagrams for reference only. Due to the update and upgrade of the product, the actual product and the diagram may be slightly different, please refer to the material item.

- Household use only. Do not use for industrial purpose. Do not use the appliance outdoors. Keep it away from sources of heat, direct sunlight, humidity (never dip it in any liquid) and sharp edges. Do not use the appliance with wet hands. If the appliance is humid or wet, unplug it immediately.
- Switch off the appliance and always disconnect the plug from the power socket (pull on the plug, not on the cable) when the appliance is not in being used, before attaching accessories, cleaning or in case of malfunction.
- Do not use the appliance without supervision. Always turn the appliance off, when you leave the room. Pull the plug cut of the socket. Close supervision is necessary when any appliance is used near children.
- Regularly check the appliance and cable for damage. Do not use the appliance if it is damaged.
- Do not attempt to repair the appliance yourself, but refer repairs to an authorized specialist. To avoid danger, faulty power cords must only be replaced by the manufacturer, customer service or a similarly qualified person using an equivalent cable.
- Only use original accessories.
- Never feed food by hand. Always use food pusher.
- Do not fix the cutting blade and cutting plate when using kibbe attachment.
- Do not grind hard food such as bones, nuts, etc. Do not grind ginger and other materials with hard fiber.
- Reverse function is prohibited while the appliance is operating (For example switch "ON" knob to "R" knob or on the contrary), wait at least one minute until grinder has come to a complete stop, otherwise it may cause an abnormal noise, vibration or a transitory electric spark in the appliance. It could result easily damage to appliance and make a user frightened.
- After use, there would be a little food left in the grinder head. This is normal. There might be a bit of black metal powder adhering to the food ground in the end. Please pick them out and throw away, do not eat them.
- This appliance is not intended for use by persons (including children) with reduce physical, sensory or mental capabilities, or lack of experience and knowledge, unless they have been given supervision or instruction concerning use of the appliance by a person responsible for their safety.

- If the supply cord is damaged, it must be replaced by the manufacturer or its service agent or a similarly qualified person in order to avoid a hazard.
- Observe the following: Special Safely Instructions.
- Keep packaging out of the reach of children (plastic bag, cardboard box, polystyrene, etc.)
- Do not allow small children to play with the foil. Danger of suffocation.

⚠ ATTENTION

- **Continuous running of meat grinder should be not more than 10 minutes with the following 10 minutes interval for motor cooling.**
- **All parts are not dishwasher safe.**

COMPONENT INTRODUCTION

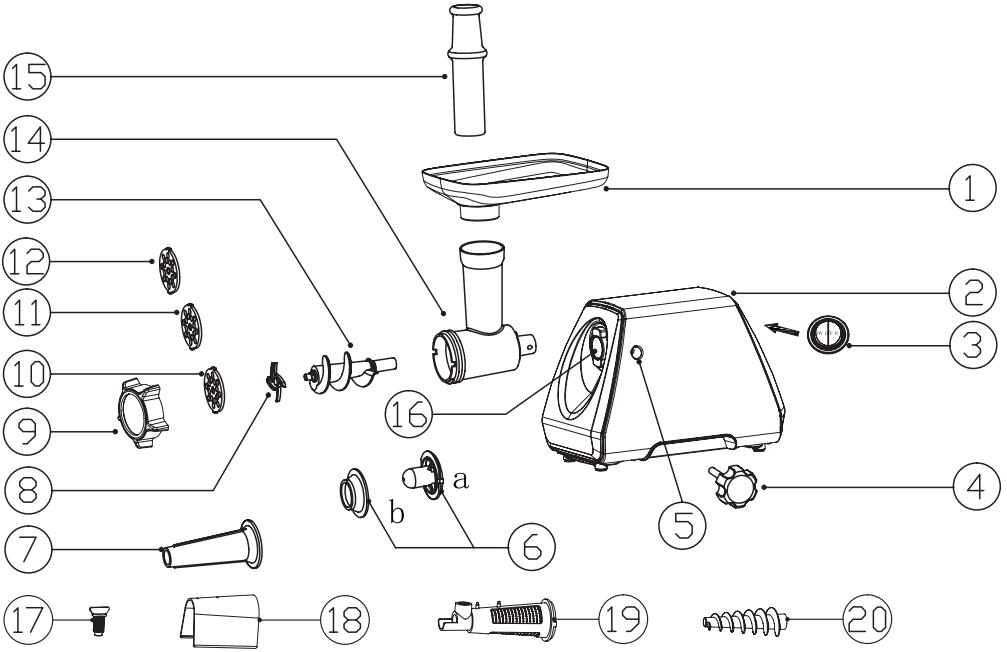

1. Hopper plate
2. Motor housing
3. Switch ON/OFF/R (On/Off/Reverse)
4. Unlock button
5. Threaded hole
6. a + b kubbe attachment
7. Sausage attachment
8. Cutting blade
9. Fixing ring
10. Fan-shaped cutting plate
11. Coarse cutting plate
12. Fine cutting plate
13. Feed screw
14. Head tube
15. Food pusher
16. Head tube inlet
17. Adjusted Screw
18. Dam-Board
19. Tomato Juicer Bracket
20. Scroll (Tomato)

⚠ FOR THE FIRST TIME

- Check that voltage indicated on the rating label corresponds the mains voltage in your home.
- To clean all parts (except the body), wipe with a cloth dampened with a dilute neutral detergent or water, then wipe clean with a dry cloth.
- Before plugging in, ensure the "ON/OFF/ R" switch(On/Off/Reverse) is turned to **"OFF"** position(Off).

ASSEMBLY OF THE MEAT GRINDER

Please also observe our illustrations under "1-7".

1. Insert the head tube into the head tube inlet on the motor housing. **(fig.1)**
2. Lock the head tube into position by turning the unlock button clockwise. **(fig.2)**
3. Insert the feed screw into the head tube, long end first, by turning the feed screw slightly until it is set into the motor housing. **(fig.3)**
4. Insert the Cutting blade with the sharpened edge outwards onto the shaft of the feed screw. **(fig.4)**
5. Select a cutting plate. **(fig.5)**

NOTE:

- Slightly grease the cutting plate beforehand with vegetable fat.
- The guides on the cutting plate are located in the recesses on the feed screw housing.

6. Support or press the center of the cutting plate with one finger then screw the fixing ring until tight with another hand. Rotate the fixing ring clockwise. Do not over-tighten. **(fig.6)**
7. You can now attach the hopper plate with whatever you want to grind. **(fig.7)**
8. The air passage at the bottom and the side of the body should be kept free and not blocked. Locate the unit on a firm place.
9. Cut all foods into pieces (Sinewless, boneless and fatless meat is recommended, approximate size: 20 mm x 20 mm x 60 mm) so that they fit easily into the Feed screw housing opening.
10. After use, please switch the unit off and unplug it from the power supply.

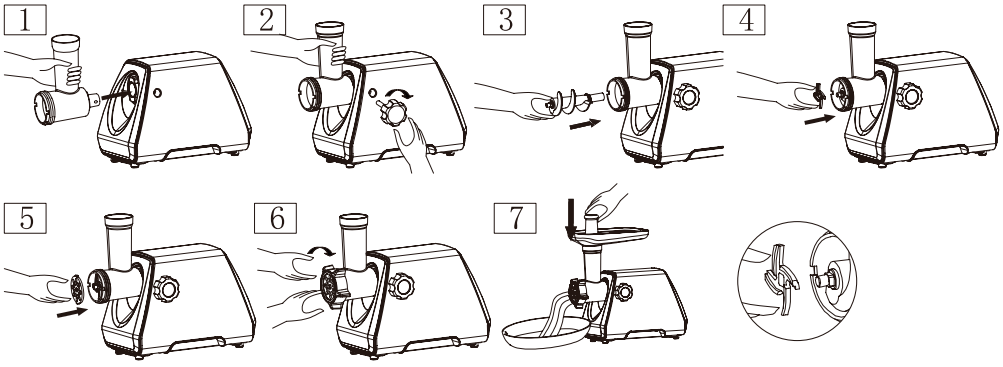

ASSEMBLY OF THE "KUBBE" ATTACHMENT

NOTE:

- Tubes of meat or dough paste can be made with the "Kibbeh" attachment.
- Please also observe our illustrations under "A and B".
- First proceed as described in "Assembly of the meat grinder" step 1 to step 3.

1. Position the 2-piece Kibbeh attachment on the shaft of the feed screw.

NOTE: The guides on attachment (A) are located in recesses on the feed screw housing.

2. Rotate the fixing ring clockwise.
3. You can now attach the hopper plate with your meat or dough mixture. See below **"Electrical connection". See page 8.**

A

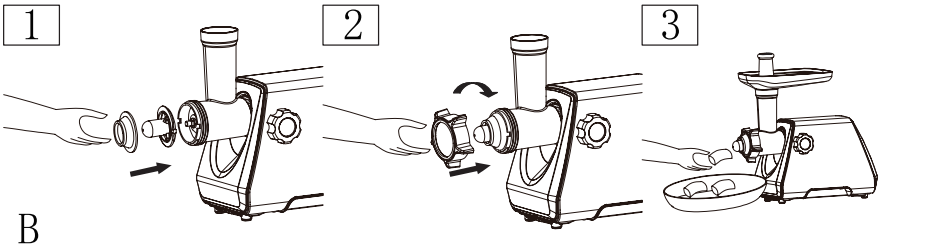

B

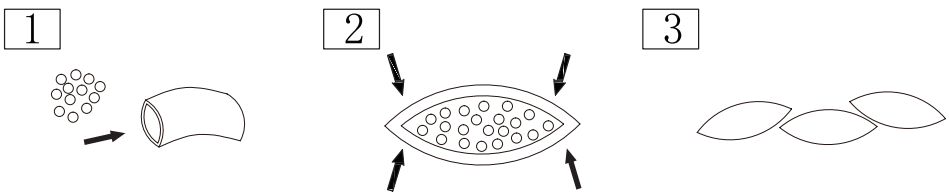

ASSEMBLY OF THE SAUSAGE ATTACHMENT

Please also observe our illustrations under "C".

1. Position the sausage attachment on the feed screw housing.
2. Rotate the fixing ring clockwise.
3. You can now attach the food tray with whatever you want to grind. See below **"Electrical connection". See page 8.**

C

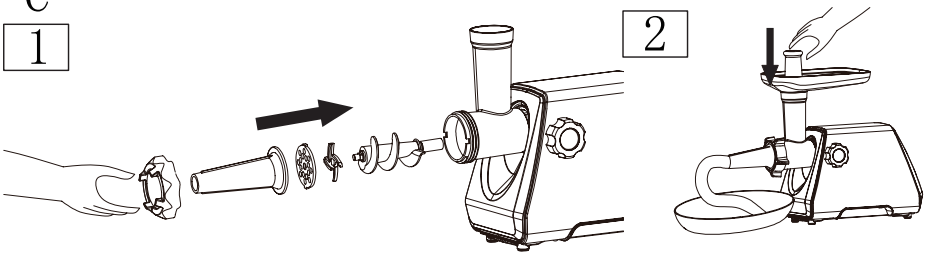

ASSEMBLY OF THE TOMATO JUICER ATTACHMENT

Please refer to the illustrations under "D".

1. Insert the feed screw into the head tube, long end first. Turn the feed screw slightly until it is set into the motor housing. **(Fig.A)**
2. Place the hopper on the head tube and connect the feed screw with the tomato scroll. **(Fig.B)**
3. Place the fix ring on the tomato juicer basket. It only needs to be put on, no need to rotate. **(Fig.C)**
4. Insert the long end of the tomato juicer basket through the hopper. **(Fig.D)**
5. Connect the tomato juicer basket with the head tube by tightening the fix ring clockwise. **(Fig.D)**

NOTE:
The guides on the tomato juicer basket are located in recesses on the head tube.

6. Position the adjusted screw on the tomato juicer basket and rotate it clockwise. **(Fig.E and Fig.F)**
7. Place the dam-board on the tomato juicer basket. **(Fig.G)**
8. Position two containers (Bowls or plates) under the vegetable scroll housing to collect the separated tomato juice and residue.**(Fig.H)**
9. For instructions on powering the machine on/off, please see the section titled **"Electrical Connection." See page 8.**

NOTE:
Before using the machine to juice tomatoes, ensure they are cut into sizes similar to the head of the meat grinder. Gently pressing them can also expedite the process.

D

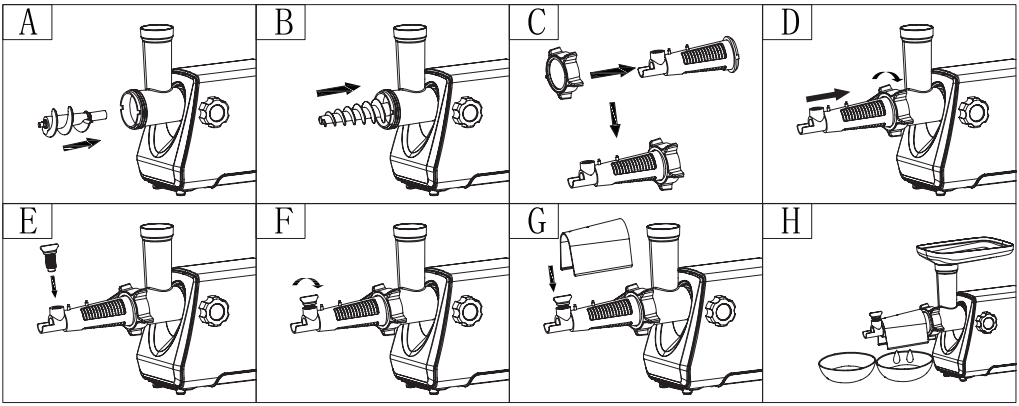

ELECTRICAL CONNECTION

Ensure that the function switch is set to **"OFF"**.

Connect appliance to correctly installed and earthed socket 120V, 60Hz.

Switches(Forward/Return Function)

The appliance is equipped with a forward and return function. If the feed screw should block, you can use the return function, in order to release it.

Forward: Move the safety switch to **"ON"** . The appliance is in the "Forward" mode.

Return: Move the safety switch to **"R (Reverse)"**. The appliance is in the "Return" mode.

Switching off

Move the safety switch to **"OFF"** and pull the power plug.

APPLICATION INSTRUCTIONS

Making sausages

- You can use either natural or artificial intestines.
- If you have decided for natural intestines, soak them beforehand for some time in water.
- Make a knot at the end of the intestine.
- Push the intestine over the sausage attachment.
- The sausage mass is pressed through the sausage attachment and the sausage intestine is filled.
- * Make sure that the sausage intestine is filled "loosely". Since otherwise the intestine could burst because the sausage expands when cooking and or frying.
- After the first sausage has achieved the require length, press the sausage together at the end of the sausage attachment with your fingers.
- Until you have acquired routine, you can switch the appliance off after each sausage section.
- Twist the sausage once or twice around its own axis.

CLEANING AND MAINTENANCE

- Always pull the power supply plug before cleaning and wait until the appliance has cooled down.
- Do not use a wire brush or other abrasive items.
- Never use sharp or scouring cleaning materials.

⚠ WARNING	Never immerse the body in water for cleaning. It could result in an electric shock or fire.

Motor housing

Only wipe the motor housing with a damp cloth and dry with a dry cloth after.

Food tray, scroll, scroll housing and all accessories.

- Do not clean these parts in the dishwasher.
- The surfaces could become lackluster.
- These parts can be cleaned by hand in the wash basin.
- Rinse with clear water and dry the parts.
- Wipe all the cutting parts by vegetable oil -wet cloth.

WARRANTY

Product Name	Model Number	Default Warranty Period	Date of Purchase	Order Number	For your own reference, we strongly recommend that you record your order number and date of purchase.
MEAT GRINDER	MGR-080	2 years			

TERMS & POLICY

AIRMSEN warrants all products to be of the highest quality in material, craftsmanship, and service, effective from the date of purchase to the end of the warranty period.

AIRMSEN will replace any product found to be defective due to manufacturer flaws based on eligibility. Refunds are available within the first 30 days of purchase. Refunds are only available to the original purchaser of the product. This warranty extends only to personal use and does not extend to any product that has been used for commercial, rental, or any other use in which the product is not intended for. There are no warranties other than the warranties expressly set forth with each product.

This warranty is non-transferrable. AIRMSEN is not responsible in any way for any damages, losses, or inconveniences caused by equipment failure by user negligence, abuse, or use noncompliant with the user manual or any additional safety or usage warnings included in the product packaging and manual.

THIS WARRANTY DOES NOT APPLY TO THE FOLLOWING:

- Damage due to abuse, accident, alteration, misuse, tampering, or vandalism.
- Improper or inadequate maintenance.
- Damage in return transit.
- Unsupervised use by children under 18 years of age.

AIRMSEN assume no liability for damage caused by the use of the product other than for its intended use or as instructed in the user manual. Some states do not allow this exclusion or limitation of incidental or consequential losses, so the foregoing disclaimer may not apply to you. This warranty gives you specific legal rights and you may also have other rights, which may vary from state to state.

ALL EXPRESSED AND IMPLIED WARRANTIES, INCLUDING THE WARRANTY OF MERCHANTABILITY, ARE LIMITED TO THE PERIOD OF THE LIMITED WARRANTY.

DEFECTIVE PRODUCTS & RETURNS

Should your product prove defective within the specified warranty period, please contact Customer Support via **service@airmsen.com** with your order number. DO not dispose of your product before contacting us. Once our Customer Support Team has approved your request, pleasereturn the unit with a copy of your invoice and order number.

CUSTOMER SUPPORT

WE'RE HERE TO HELP!

If you encounter any issues or have any questions regarding your new product, please contact our helpful Customer Support Team. Your satisfaction is our goal!

CUSTOMER SUPPORT

Email: **service@airmsen.com**
Telephone: **1-844-725-2333**

To best serve you, our AIRMSEN Representatives are available to answer your calls:
Monday to Friday, 8:00 AM – 10:00 PM EST
Saturday and Sunday, 9:00 AM - 5:00 PM EST

If you need to purchase product accessories, please visit **www.airmsen.com.**

* Please have your order confirmation number ready before contacting Customer Support.

https://www.facebook.com/Airmsen

https://www.youtube.com/@AIRMSEN

For product operation videos, please subscribe to AIRMSEN's official Youtube account.

CODE NO.: AM-2608-US

AIRMSEN

QUESTIONS OR COMMENTS?

EMAIL	OR VISIT US ONLINE AT
service@airmsen.com	www.airmsen.com

Made in China