NEW

A1 Dishwasher Repair Manual

April 2, 2023

Version
01

Table of Contents

1. Disassembly and Assembly

1.1 Maintenance Tools and Jigs

1.2 Whole-unit exploded view

1.3 Main Components Introduction

1.4 Main components disassembly

1.5 Main electrical components

2. Bottle washer water circulation system

2.1 Dishwasher water circulation system

3.Fault alarm maintenance

3.1 E1 inlet water abnormality

3.2 E2 Drainage Abnormality

3.3 E3: Overflow Abnormality

3.4 E4 water temperature sensor malfunction

3.5 E5 Communication Fault

3.6 E6 heating element does not heat up

3.7 Machine fails to wash – Troubleshooting and Repair

3.7 Machine water leakage fault diagnosis and repair

4.Wiring Diagram and Connection Schematic

1.1 Maintenance Tools and Jigs



multimeter

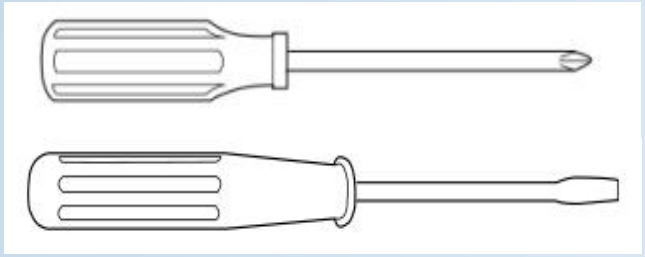

Screwdriver (straight-tip and十字-head)



Clamp wrench

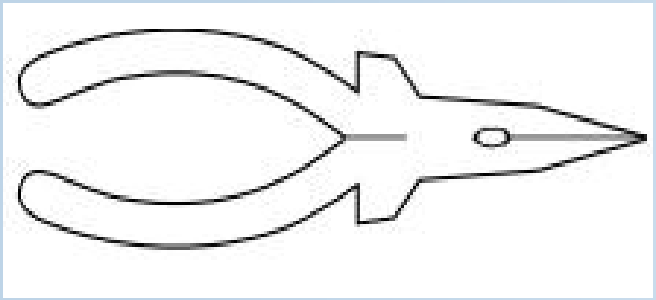

long flat nose pliers

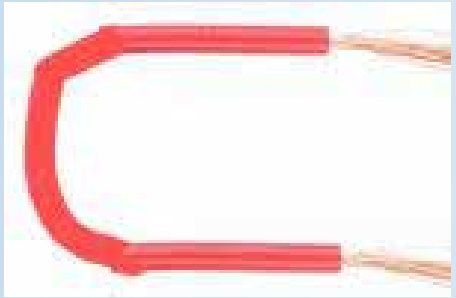

Self-made jumper cable

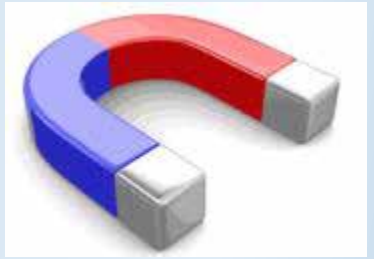

magnet

1.2 Whole-Unit Exploded View

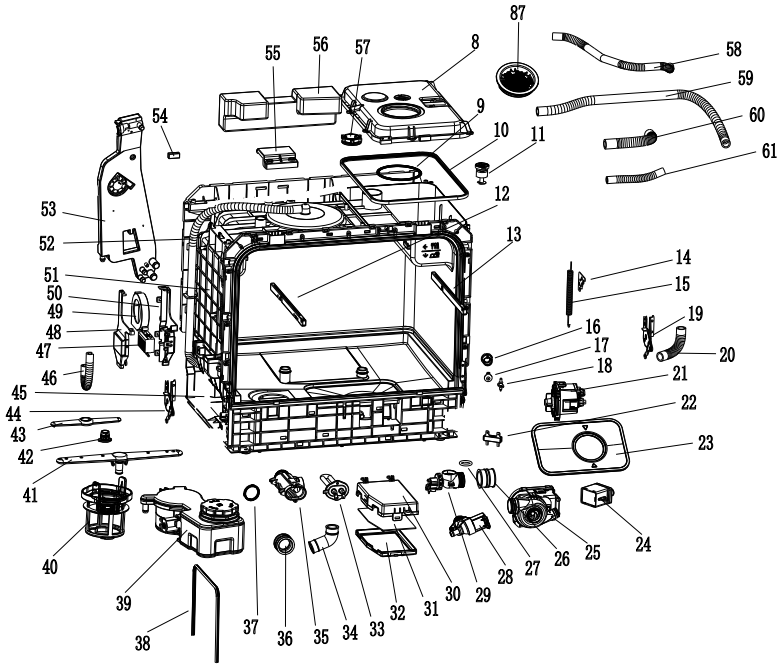

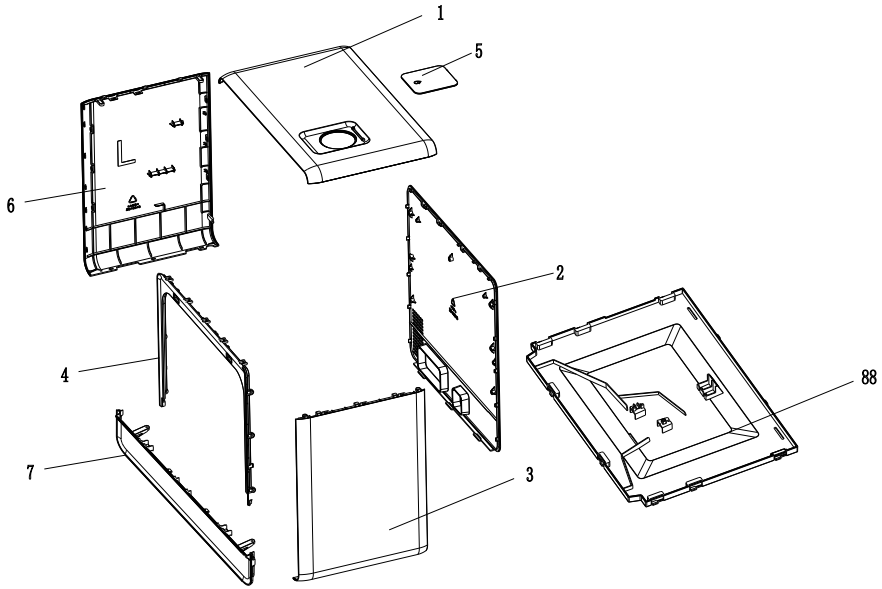

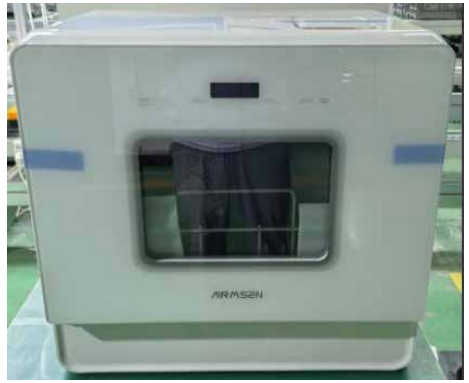

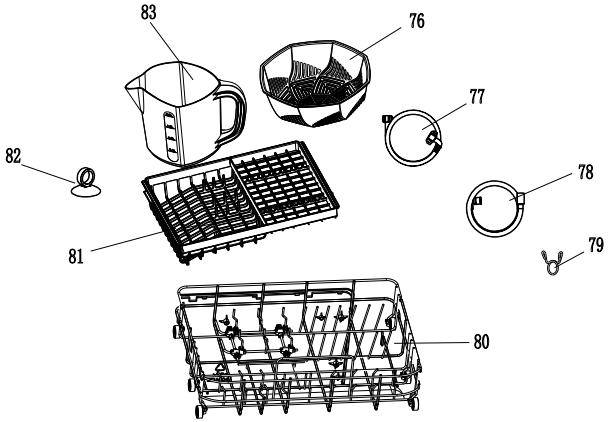

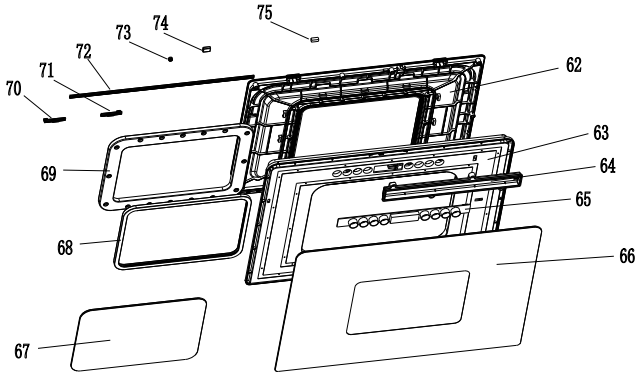

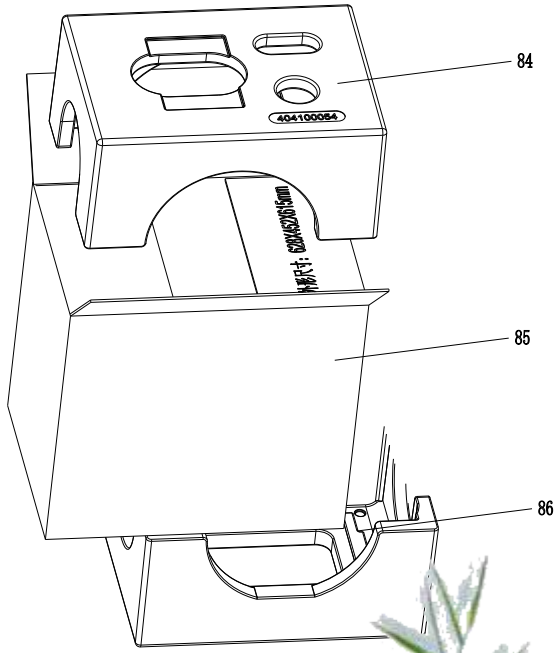

No.	Part No.	Part Name	Specification	Unit	Qty per Unit
1	D301000047	A1 Top Cover	A1 top cover, white weather-resistant ABS, UV resistant, high gloss, weight: 673 g, W010047	pc	1
2	D301000050	A1 Back Panel	A1 back panel, white PP, high gloss, weight: 665 g, W010050	pc	1
3	D301000049	A1 Side Panel - Right	A1 side panel - right, white weather-resistant ABS, UV resistant, high gloss, weight: 535 g, W010049	pc	1
4	D301000051	A1 Front Panel	A1 front panel, white weather-resistant ABS, UV resistant, high gloss, weight: 114 g, W010051	pc	1
5	D301000045	Water Tank Lid	A1 water tank lid, white ABS+PC alloy, high gloss, weight: 31 g, W010045	pc	1
6	D301000048	A1 Side Panel - Left	A1 side panel - left, white weather-resistant ABS, UV resistant, high gloss, weight: 539 g, W010048	pc	1
7	D301000052	A1 Decorative Panel	A1 decorative panel, appearance part, no holes, white weather-resistant ABS, UV resistant, high gloss, weight: 172 g, W010052	pc	1
8	D301000380	Water Tank Top Cover	A1 water tank top cover, cold grey 6C, PPTD20, weight: 210 g, inlet port sealed, W010062	pc	1
9	D305000023	Water Fill Port Gasket	A1 water fill port gasket, silicone, weight 3.1 g, black, hardness 50 Shore A, W050023	pc	1
10	D305000022	Water Tank Gasket	A1 water tank gasket, silicone, weight 21.2 g, natural color, hardness 50 Shore A, W050022	pc	1
11	D303030105	Water Tank Float	Reed switch, 2-wire, SM 3-pin male connector W030038	pc	1
12	D301000066	Guide Rail - Left	A1 guide rail - left, cold grey 6C, POM, textured finish, weight: 20 g, W010064	pc	1
13	D301000067	Guide Rail - Right	A1 guide rail - right, cold grey 6C, POM, textured finish, weight: 20 g, W010065	pc	1
14	D302000006	Spring Hanger	Spring hanger, galvanized sheet T=1.0 mm, W020008	pc	2
15	D302000011	Spring	A1 spring, 82B galvanized, wire dia. 1.5 mm, OD 11 mm, total length 150 mm (stretched 65 mm, tension 81 N), W020013	pc	2
16	D301000087	Check Valve Bracket	A1 check valve bracket, cold grey 6C, PPTD20, weight: 2.2 g, W010085	pc	1
17	D305000033	Check Valve Flap	A1 check valve flap, silicone, weight 0.3 g, red, hardness 55 Shore A, W050030	pc	1
18	D303030009	Water Temperature Sensor	SM 2-pin male plug, cable length 70 mm, B3435 10K, W030008	pc	1
19	D203020002	Hinge Assembly - Right	A1 hinge assembly - right, SUS430 stainless steel T=1.5 mm, rivets SUS430 stainless steel W020007	pc	1
20	D305000031	Inlet Pump Inlet Hose	A1 inlet pump inlet hose, EPDM, pre-bent hose, OD 20 mm, ID 14 mm, hardness 60 Shore A, W050028	pc	1
21	D303030070	Drain Pump	220-240V 50Hz 30W permanent magnet synchronous motor (domestic: B12-6A01, P25-1, FD1718C/AP-1201; Europe: FD1718C, B12-6A01) W030040	pc	1
22	D203090095	Overflow Probe Assembly	C1 overflow probe assembly - after-sales part	pc	2
23	D302000005	Flat Filter Screen	A platform flat filter screen, SUS304/T0.4, dia. 0.8 mm holes at 1.55 mm pitch, electrolytic, length x width = 194.8 x 124.8 mm W020005	pc	1
24	D303030049	Inlet Pump	220-240V 50/60Hz 12W permanent magnet synchronous motor (DP15-1A JW) W030032	pc	1
25	D303030046	Wash Pump	A1 platform, 220-240V 50Hz 35W permanent magnet synchronous motor, 250 terminal (C20-6A02 HY) W030041	pc	1
26	D305000037	Wash Pump Outlet Hose, Large	A1 wash pump outlet hose, large, EPDM, molded hose L=30 mm, black, hardness 50 Shore A, W050034	pc	1
27	D305000035	Three-way Diverter Gasket	A1 three-way diverter gasket, NBR, weight 1.1 g, black, hardness 55 Shore A, W050032	pc	1
28	D303030051	Inlet Valve	12V 0.7A normally closed, 3/4 in W030042	pc	1
29	D202010001	Three-way Diverter Assembly	A1 three-way diverter assembly, cold grey 6C, PPTD20, with pressure switch (Dongnan, KW3A), pressure switch mounting bracket PP+30GF, pressure switch O-ring, W010107	pc	1
30	D301000083	Power Supply Box	A1 power supply box, black, flame retardant V0, MPPO, weight: 48 g, W010081	pc	1
31	D303010041	A1 Power Board	A1 power board, onboard 12V 2A power supply, W030031	pc	1
32	D301000084	Power Supply Box Cover	A1 power supply box cover, black, flame retardant V0, MPPO, weight: 33 g, W010082	pc	1
33	D303030050	Heating Element	220V 900W, 250 terminal tab, single thermal fuse W030039	pc	1
34	D305000038	Wash Pump Outlet Hose, Small	A1 wash pump outlet hose, small, EPDM, molded hose, black, hardness 50 Shore A, 17.5 g, W050056	pc	1
35	D301000080	Heater Bracket	Heater bracket, black, flame retardant V0, PBT+30GF, weight: 43 g, W010078	pc	1
36	D305000036	Wash Pump Inlet Hose	A1 wash pump inlet hose, EPDM, molded hose L=22 mm, black, hardness 50 Shore A, W050033	pc	1
37	D305000032	Heater Inlet Gasket	A1 heater inlet gasket, NBR, weight 1.8 g, black, hardness 55 Shore A, W050029	pc	1
38	D305000039	A1 Door Seal	A1 door seal, foamed EPDM, length L=1120 mm, hardness 45 Shore A, W050036	pc	1
39	D303030094	A Platform Water Softener	(Overseas model - softener cover in 4 languages: English, French, German, Italian, color cold grey 6C); softener valve: 12V 0.7A normally closed / float sensing board: Hall effect 5V signal, ground, W030085	pc	1
40	D301000130	Dual-sided Integrated Filter	A1 dual-sided integrated filter, cold grey 6C, PP+30GF, nylon mesh 50 mesh, textured finish, weight: 26 g, W010110	pc	1
41	D301000062	Lower Spray Arm	A1 lower spray arm, cold grey 6C, PPTD20, textured finish, weight: 31 g, W010060	pc	2
42	D301000073	Upper Spray Arm Fixing Piece	A1 upper spray arm fixing piece, cold grey 6C, POM, high gloss, weight: 2.6 g, W010071	pc	1
43	D301000063	Upper Spray Arm	A1 upper spray arm, cold grey 6C, PPTD20, textured finish, weight: 11 g, W010061	pc	1
44	D203020001	Hinge Assembly - Left	A1 hinge assembly - left, SUS430 stainless steel T=1.5 mm, rivets SUS430 stainless steel W020006	pc	1
45	D301000059	Water Tank	A1 water tank, cold grey 6C, PPTD20, interior textured finish, with water softener hole, weight: 1341 g, W010059	pc	1
46	D305000075	Internal Inlet Hose (with Water Softener)	A1 internal inlet hose, EPDM, pre-bent hose, OD 15 mm, ID 9 mm, hardness 60 Shore A, W050055	pc	1
47	D303030147	PTC Heater	Slim model, 20 mm thick, 220-240V 50/60Hz 120W (air duct power) W030034, domestic and European markets, without fuse	pc	1
48	D301000085	Air Duct Cover	A1 air duct cover, black, flame retardant V0, PBT+30GF, weight: 26 g, W010083	pc	1
49	D303030055	Fan	7515 housing, 4200 rpm, 12V W030033	pc	1
50	D301000086	Air Duct Box	A1 air duct box, black, flame retardant V0, PBT+30GF, weight: 33 g, W010084	pc	1

No.	Part No.	Part Name	Specification	Unit	Qty per Unit
51	D301000058	Inner Tub	A1 inner tub, cold grey 6C, PPTD20, interior textured finish, with LED light hole, weight: 2139 g, W010058	pc	1
52	D305000024	Upper Spray Arm Inlet Hose	A1 upper spray arm inlet hose, EPDM, straight hose L=790 mm, OD 15 mm, ID 9 mm, hardness 60 Shore A, W050024	pc	1
53	D303030183	A1 Water Inlet Distributor	Without diverter valve, flow meter: 113 pulses/L, W030051	pc	1
54	D303030006	Magnetic Induction Switch	Reed switch, 24V 50mA, lead length 70, W030019	pc	1
55	D301000072	Counterweight Mounting Bracket	A1 counterweight mounting bracket, cold grey 6C, PP+30GF, weight: 26 g, W010070	pc	1
56	D307000007	Counterweight	A1 counterweight, 240 x 35 x 56 mm, weight: 1.08 kg, W070002	pc	1
57	D303030057	Illumination Light	2-wire, red (+12V), black (lighting) W030037, 6500K white light, SMD LED, high brightness	pc	1
58	D305000027	Inlet Valve Outlet Hose	A1 inlet valve outlet hose, EPDM, straight hose L=130 mm, OD 15 mm, ID 9 mm, hardness 60 Shore A, W050024	pc	1
59	D305000030	Water Softener Inlet Hose	A1 water softener inlet hose, EPDM, pre-bent hose, OD 15 mm, ID 9 mm, hardness 60 Shore A, W050027	pc	1
60	D301000039	Drain Pump Outlet Hose	A1 drain pump outlet hose, corrugated hose L=430 mm, PP+TPE, cold grey 6C, straight ends on both sides, W010040	pc	1
61	D305000025	Inlet Pump Outlet Hose	A1 inlet pump outlet hose, EPDM, straight hose L=445 mm, OD 15 mm, ID 9 mm, hardness 60 Shore A, W050024	pc	1
62	D301000091	A1 Inner Door	A1 inner door, cold grey 6C, PPTD20, interior appearance textured finish, weight: 475 g, English "detergent" marking, dishwasher powder marking, W010042	pc	1
63	D301000041	A1 Door Frame	A1 door frame, white weather-resistant ABS, UV resistant, high-gloss appearance, weight: 480 g, W010041	pc	1
64	D301000044	A1 Display Board Box Cover	A1 display board box cover, black ABS, weight: 37 g, W010044	pc	1
65	D203030041	A1 Display Board Assembly	AI display board assembly (version A13, diverter valve removed based on A04)	pc	1
66	D306000033	Decorative Glass A1	A1 decorative glass - English version, tempered glass, thickness 3 mm, screen-printed white base with high-temperature ink 3 mm, size 527.4 x 376.3 x 3 mm, European Yiansheng (with water softener), W060034	pc	1
67	D306000002	Inner Door Glass A1	A1 inner door glass, tempered glass, thickness 3 mm, transparent, size 272 x 192 x 3 mm, W060002	pc	1
68	D305000020	Inner Door Gasket	A1 inner door gasket, silicone, weight 43 g, natural color, hardness 45 Shore A, W050020	pc	1
69	D301000043	Inner Door Seal Frame	A1 inner door seal frame, white weather-resistant ABS, UV resistant, high-gloss appearance, weight: 134 g, W010043	pc	1
70	D305000043	Door Bottom Water Baffle Seal - Left	A1 door bottom water baffle seal - left, EPDM, black, hardness 60-65 Shore A, W050038	pc	1
71	D305000044	Door Bottom Water Baffle Seal - Right	A1 door bottom water baffle seal - right, EPDM, black, hardness 60-65 Shore A, W050038	pc	1
72	D305000042	A1 Door Bottom Seal	A1 door bottom seal, EPDM, black, hardness 50 Shore A, W050037	pc	1
73	D305000021	Screw Plug	A1 screw plug, silicone, cold grey 6C, textured finish, hardness 50 Shore A, W050021	pc	6
74	D302000007	Door Switch Magnet	Ferrite, 160 +/- 15 mT, C0905290, 15 x 6 x 6 mm, Y30BH, W020009	pc	1
75	D302000008	Door Magnet	Door magnet, strong magnet (N35), 15 x 10 x 5 (15 x 10 face is the magnetized face), 3500-3800 GS, W020010	pc	4
76	D301000070	Fruit and Vegetable Basket	Fruit and vegetable basket, cold grey 6C, PPTD20, textured finish, weight: 141 g, W010068	pc	1
77	D307000009	Inlet Hose	Inlet hose (EU standard VDE), (PY-18 or SP), L=1.5 m, grey, hose OD 12.5 mm, straight end G3/4, elbow end G3/4, W070001	pc	1
78	D301000090	Drain Hose	A1 drain hose, cold grey 6C, corrugated hose, L=1500 mm, PP+TPE, W010087	pc	1
79	D308000021	M18 Clamp	ID 18 mm, 304 stainless steel, single-wire clamp	pc	1
80	D203020004	Dish Rack Assembly	A1 EU-standard dish rack assembly, metal parts Q195, PA dip coated, rollers and axles in cold grey 6C, W020018	set	1
81	D301000065	Upper Rack	A1 upper rack, cold grey 6C, PPTD20, textured finish, weight: 243 g, W010063	pc	1
82	D305000046	Silicone Suction Cup	Dishwasher silicone suction cup, Shore hardness 55 +/- 3, grey, inner hole dia. 17, W050049	pc	1
83	D301000069	Water Fill Cup	Water fill cup, natural PP, textured finish, weight: 220 g, W010067	pc	1
84	D304040126	A1 Overseas Upper Foam	A1 overseas upper foam, EPS, white, eco density 18 kg, weight 180 g, W040120	pc	1
85	D304020331	A1 Master Carton	European Yiansheng (with water softener), A01 carton with top and bottom flaps sealed, 625 x 415 x 565 mm, board thickness 5 mm, reinforced, burst strength 1500 kPa, edge crush 6000 N/m, W040332	pc	1
86	D304040128	A1 Overseas Lower Foam	A1 overseas lower foam, EPS, white, eco density 18 kg, weight 209 g, W040122	pc	1
87	D301000046	Water Tank Filter	A1 water tank filter, cold grey 6C, PPTD20, textured finish, weight: 20 g, W010046	pc	1
88	D301000071	Service Cover	A1 service cover, cold grey 6C, PPTD20, textured finish, weight: 349 g, W010069	pc	1

1.3 Main Components Introduction

Water inlet valve:When powered on, tap water can enter the machine;

When the power is off, it prevents tap water from entering the machine.



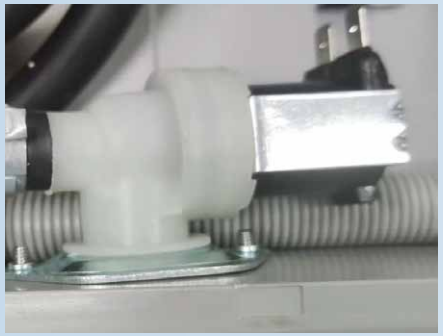

Respirator:The respirator is equipped with a flow meter for precise control of water intake.





Water softener:A specialized part for dishwashers designed to soften water, preventing scale buildup on surfaces; the water softening process requires specialized salt that must be added periodically.





Washing pump:Primarily drives the water flow and serves as the heart of the dishwasher.





Heating Element:Primarily used to heat the water inside the inner tank.



Overflow switch:When water leaks from the machine, it accumulates on the maintenance cover; if the water contacts the terminals of the overflow switch, an E3 alarm will be triggered.

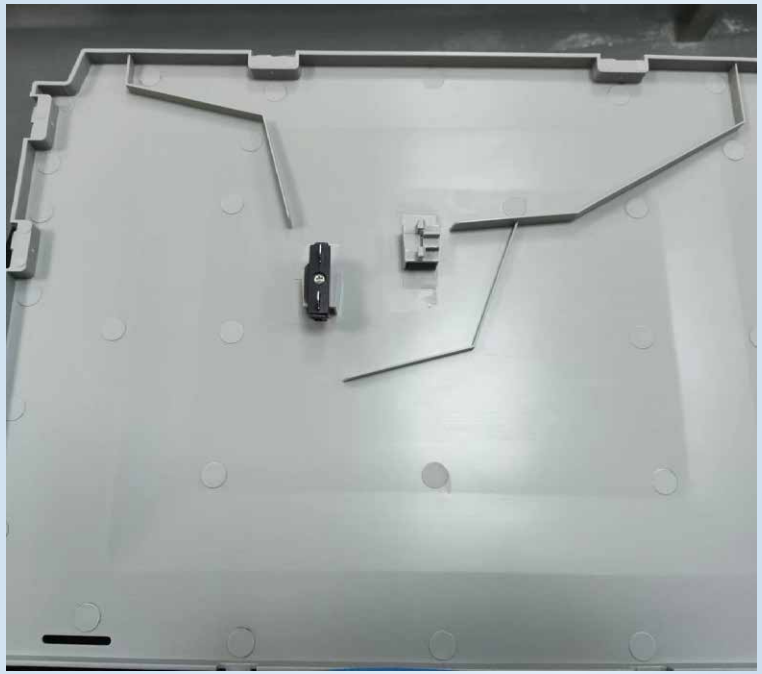

Upper spray arm removal: Turn the upper spray arm fastener clockwise to remove the upper spray arm.



1.4 Main Components Disassembly

Remove the maintenance cover;carefully pry open each fastening tab on the maintenance cover.



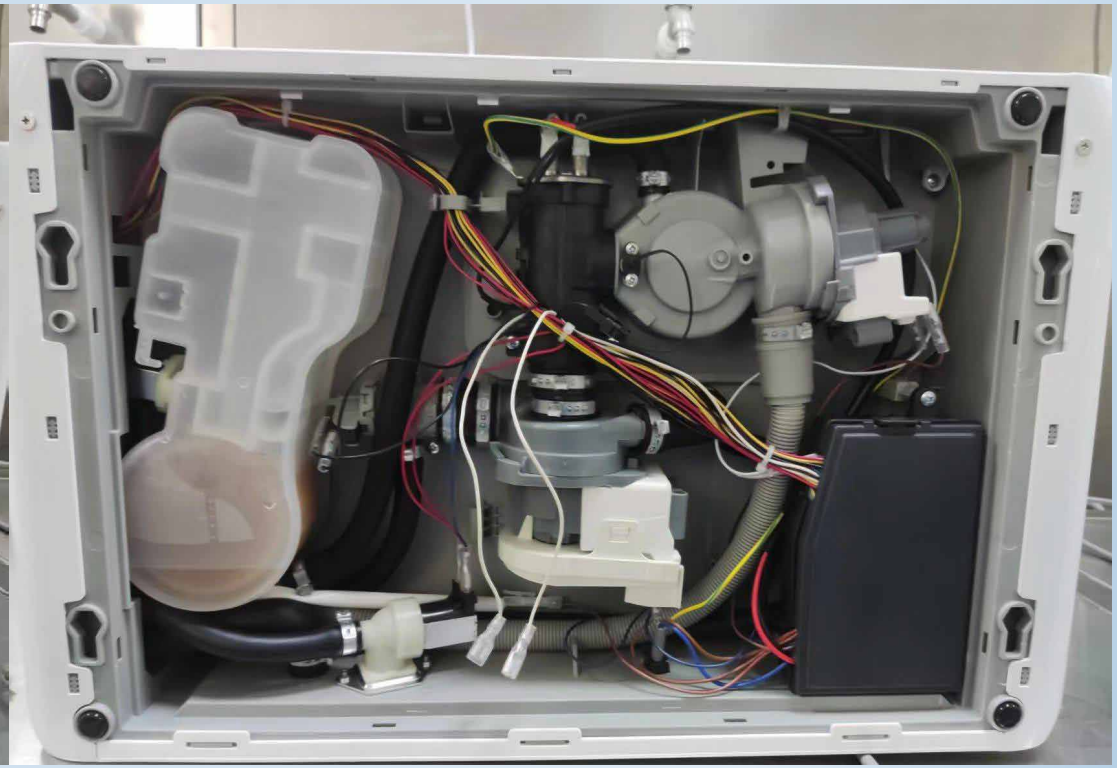

Disassembly of the inlet valve:Remove the screws from both sides of the inlet valve, then use a pair of scissors to detach the clamp, and finally remove the inlet valve.



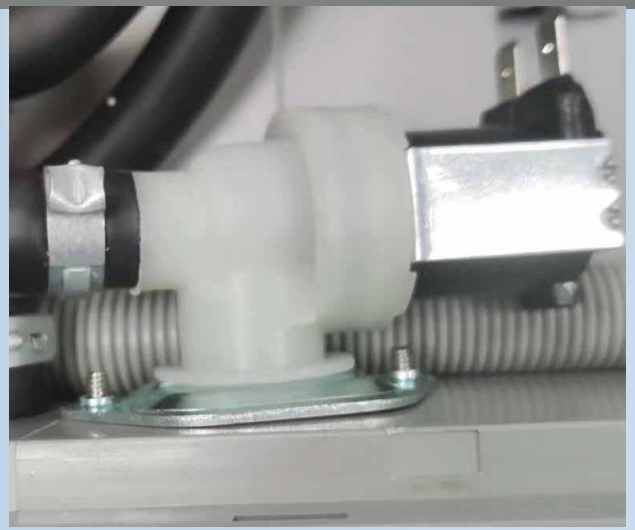

Water softener disassembly:First, remove the screws from the water softener; then, twist the cover counterclockwise to remove it; next, take out the water softener nut; finally, remove the water softener itself.

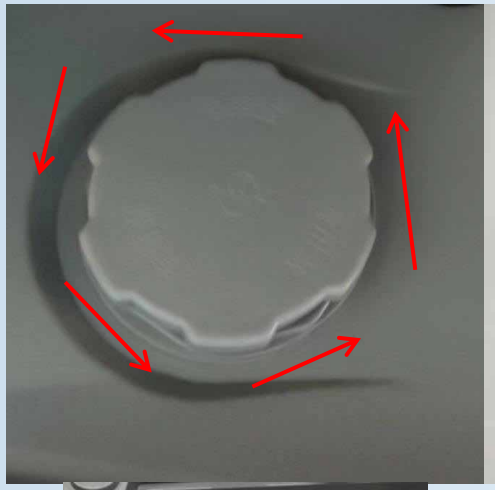

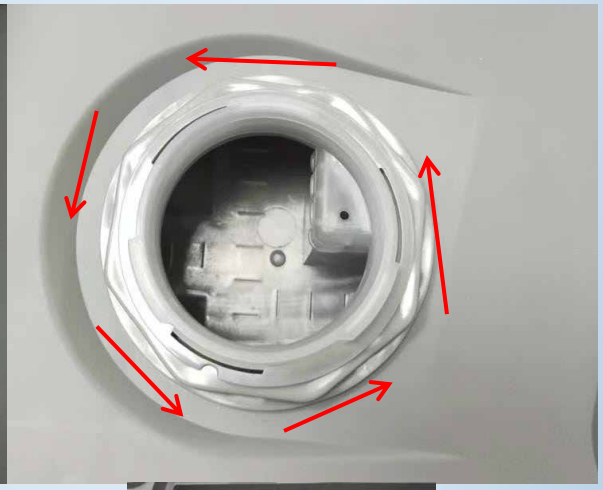





Heating element removal:Remove the two screws from the heating element, then extract the entire heating element.





Drainage pump disassembly:Press the locking tab down, then turn the drainage pump counterclockwise.

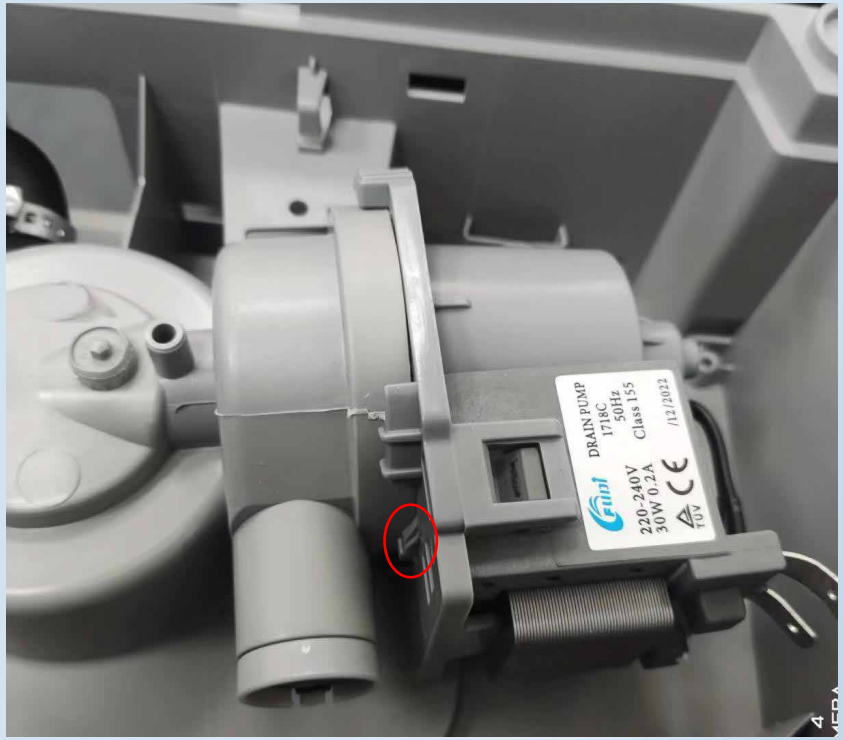

1.5 Main Electrical Components

Fan assembly



Inlet valve assembly



Water intake pump assembly

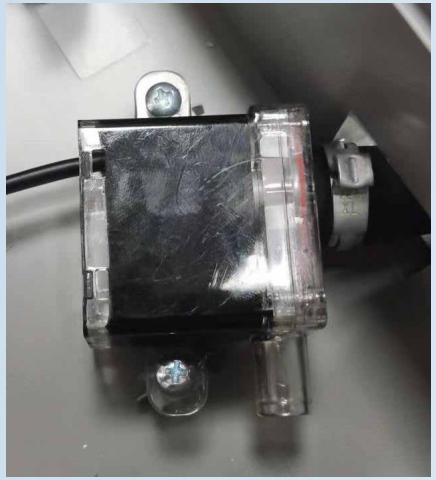

Heating tube assembly



Power Supply Board Assembly



display board



Washing Pump Assembly



Drainage Pump Assembly



2.1 Dishwasher water circulation system



Washing Pump ④



③

softener

Lower spray arm

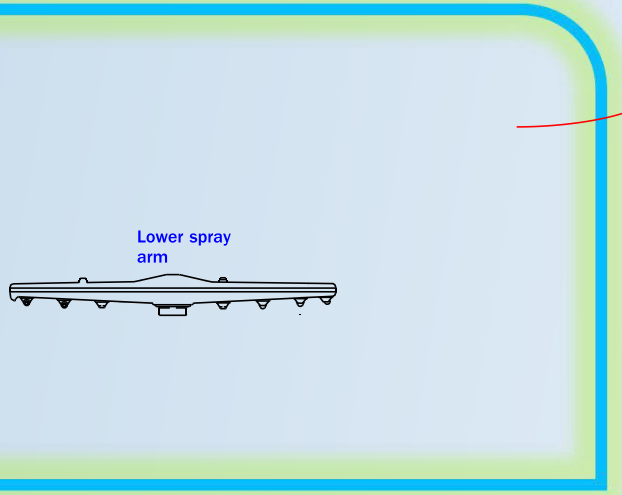

wet-pit pump

⑤



②

⑥





inlet valve

①

⑦

Water distribution manifold

Inlet route

Discharge route

3.1 E1 – Abnormal water intake

- During the inlet phase, the number of pulses input by the flow meter within the first 15 seconds is less than 5;
- The digital display's low-water level indicator light is illuminated (red) and does not flash;
- The buzzer will sound five times every 2 seconds;
- Press the Start/Pause button to reset the alarm; the wash cycle will continue, and the system will perform a re-detection.
- Three consecutive detection failures trigger an E1 alarm;
- Hold the power button to power off the device.

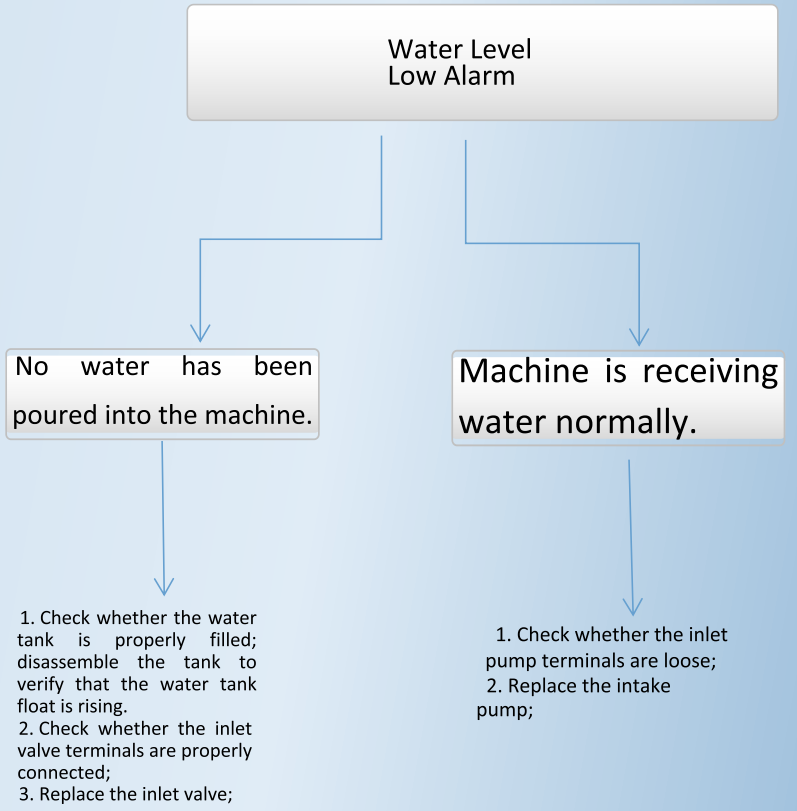





inlet valve



Water intake pump

3.2 E2 – Drainage Abnormality

- Drainage testing shall be performed only at the conclusion of the initial wash cycle; no further drainage testing shall be conducted during subsequent wash cycles.
- Drainage inspection: After each drainage pump operates for 30 seconds, activate the washing pump for 5 seconds; if the pressure switch receives a closed-circuit signal during this period, continue operating the drainage pump for another 30 seconds, then repeat the activation of the washing pump for 5 seconds; if the pressure switch receives a closed-circuit signal, an abnormal drainage alarm shall be triggered.

Fault Handling Guide

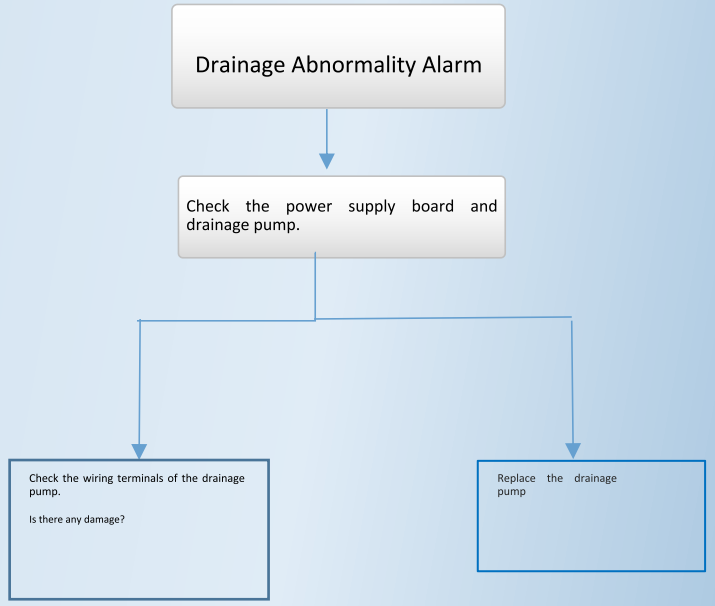





3.3 E3 Overflow Switch Abnormality

The system can detect a water leakage signal; after another 10-second detection, if the alarm appears three consecutive times, an alert is triggered.

Fault Handling Guide

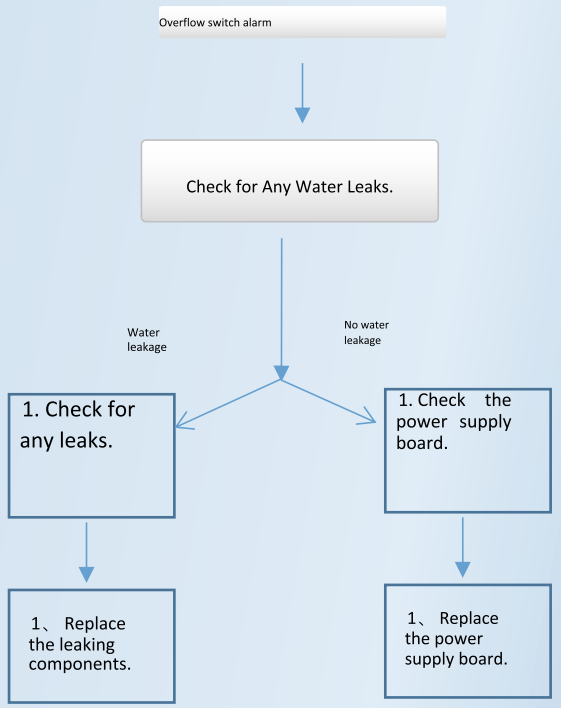



3.4 E4 Water Temperature Sensor Malfunction

- When the machine detects an open-circuit or short-circuit in the water temperature sensor, an alarm condition is triggered;
- Upon detecting an abnormality in the water temperature sensor, heating is stopped, but the washing program continues;
- Upon completion of the wash cycle, an E4 alarm will be displayed;
- Do not activate the buzzer;
- Press and hold the power button for 1 second to power off;

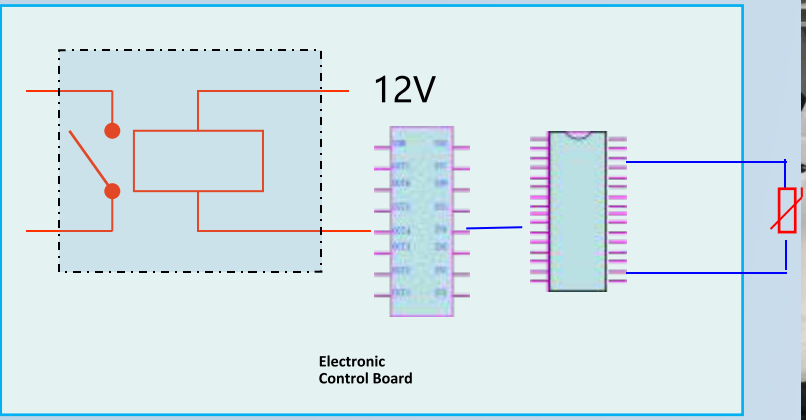

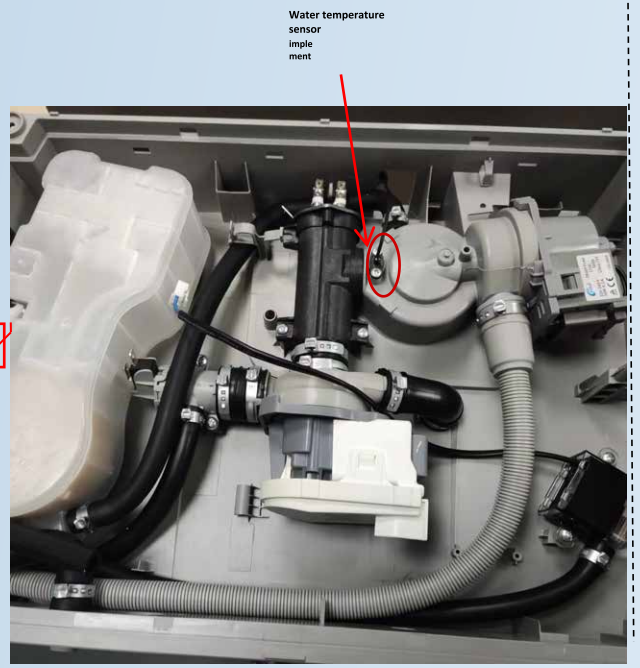

Fault Handling Guide

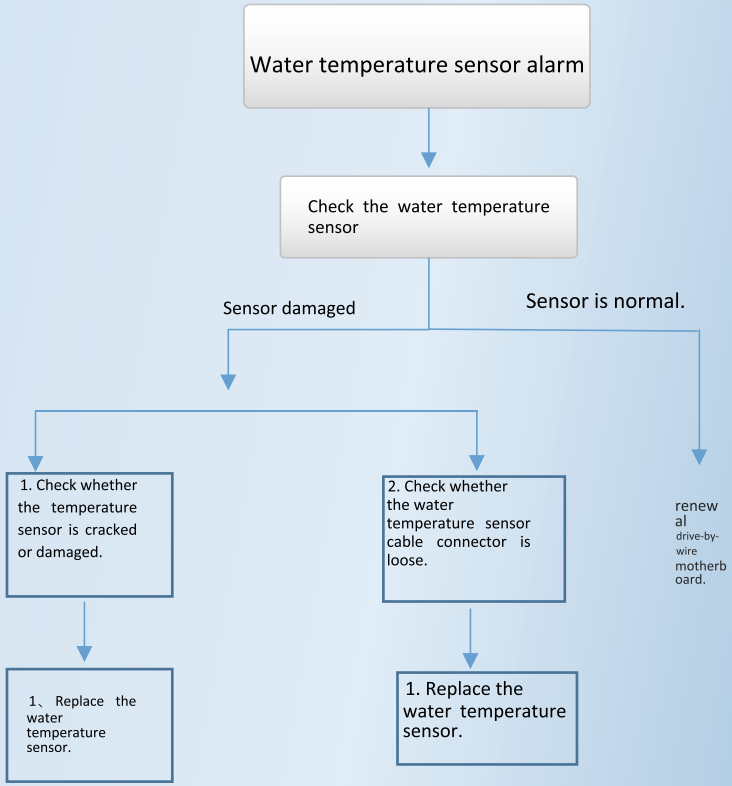

3.5 E5
Communication Fault

Communication between the display panel and the mainboard is interrupted for 30 seconds; an alarm is triggered; the washing program is terminated; the display shows "E5";
The buzzer will sound five times every 2 seconds;
Press and hold the power button for 1 second to power off the device.

Fault Handling Guide

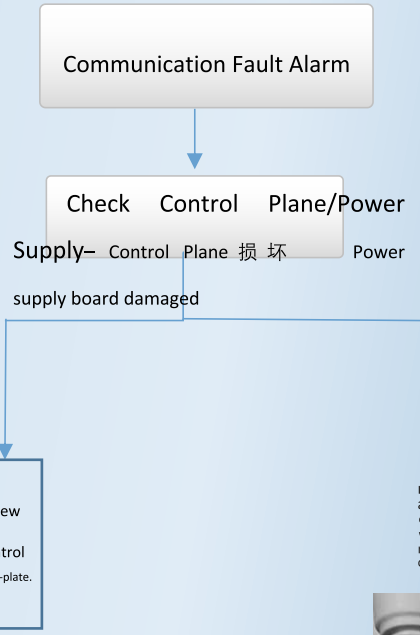





3.6 E6 Heating Element Does Not Heat Up

During the washing process, in the final hot rinsing stage, determine whether the heating plate is faulty; Measurement point: After adding water, measure the initial temperature; Apply continuous heating for 180 seconds and measure the final temperature; Perform multiple sampling at each temperature point to eliminate measurement errors;

If the initial temperature exceeds 50°C, the heating plate failure detection shall not be performed: if the program does not initiate heating, this detection step shall not be executed; if, during the heating process, the user opens the door or presses the pause button, these two temperature thresholds shall be defined upon resuming the program; if the remaining time is insufficient to complete the detection, the current detection attempt shall be aborted.

Measurement
Abandonment:

Sensor: Water temperature sensor;

The temperature difference between these two points (where the latter is higher than the former) serves as the basis for determination; if the temperature difference between these two points is less than 5°C, an alarm is triggered:

1. Washing Cycle Continues: (Drainage, Drying)
2. Upon Completion of the Drying Process, the Message "E6" Will Be Displayed;
3. The buzzer will sound five times every 2 seconds:
4. Long-Press the Power Button for 1 Second to Power Off;

Fault Handling Guide

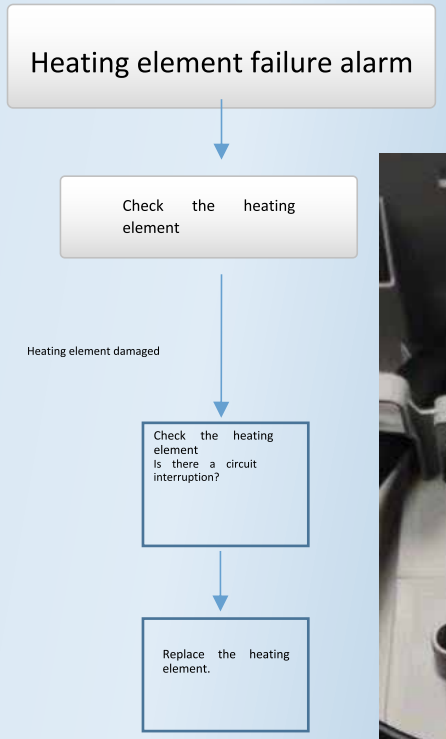



3.7 Machine fails to wash – Troubleshooting and Repair

Fault Description: The machine does not perform any washing operation (no water spraying) after the machine has been filled with water.

Fault Handling Guide:

Machine fails to wash – Troubleshooting and Repair

1. Check whether the washing pump's wiring terminals are loose.

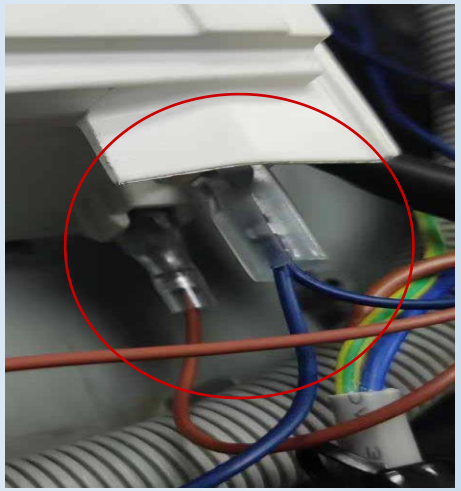

1、 The machine washing pump is faulty; replace the washing pump.



3.8 Machine non-draining fault diagnosis and repair

Fault Description: During the washing cycle, the machine draws in and discharges water; if the water level in the inner tank exceeds its capacity without proper drainage, water may overflow through the door gap.

Fault Handling Guide:

Dry Run

1. Check whether the drainage pipe is blocked.
   - When using the powerful drainage function, disconnect the drainage pipe and use chopsticks to clear the machine's discharge outlet while draining water;
2. Check whether the discharge outlet height of the drainage pipe is too high.
   - The discharge outlet height shall not exceed 0.5 meters.
3. Check whether the drainage pump terminals are detached or loose.
   - Re-tighten the drainage pump terminal block.
4. Check whether the drainage pump is operating normally.
   - 1. Use a multimeter to measure the resistance of the drainage pump.
     2.啟動強制排水泵功能,觀察排水泵是否正常運行.
     3、 After completing the above steps 1 and 2, if the drainage pump is faulty, replace it.



Outfall





3.9 Machine Water Leakage Fault Diagnosis and Repair

Fault Description:

1. Water is leaking from the bottom of the machine.

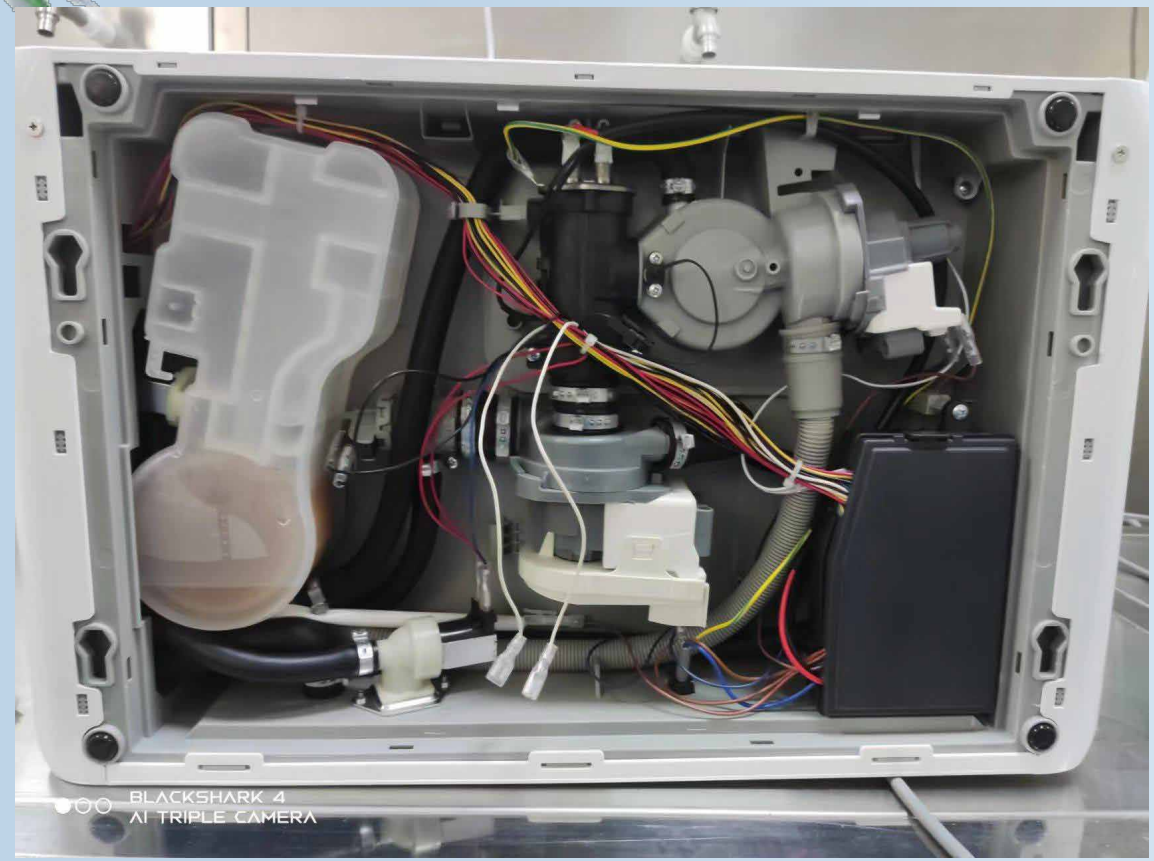

Disassembly and Repair Cover

Fault Handling Guide:

Machine leaking water

↓

Remove the maintenance cover to inspect the leaky area; elevate the machine.

↓

Locate the leak and repair it; leaks are usually caused by issues such as improperly secured seals or damaged electrical components.

4.1Wiring Diagram

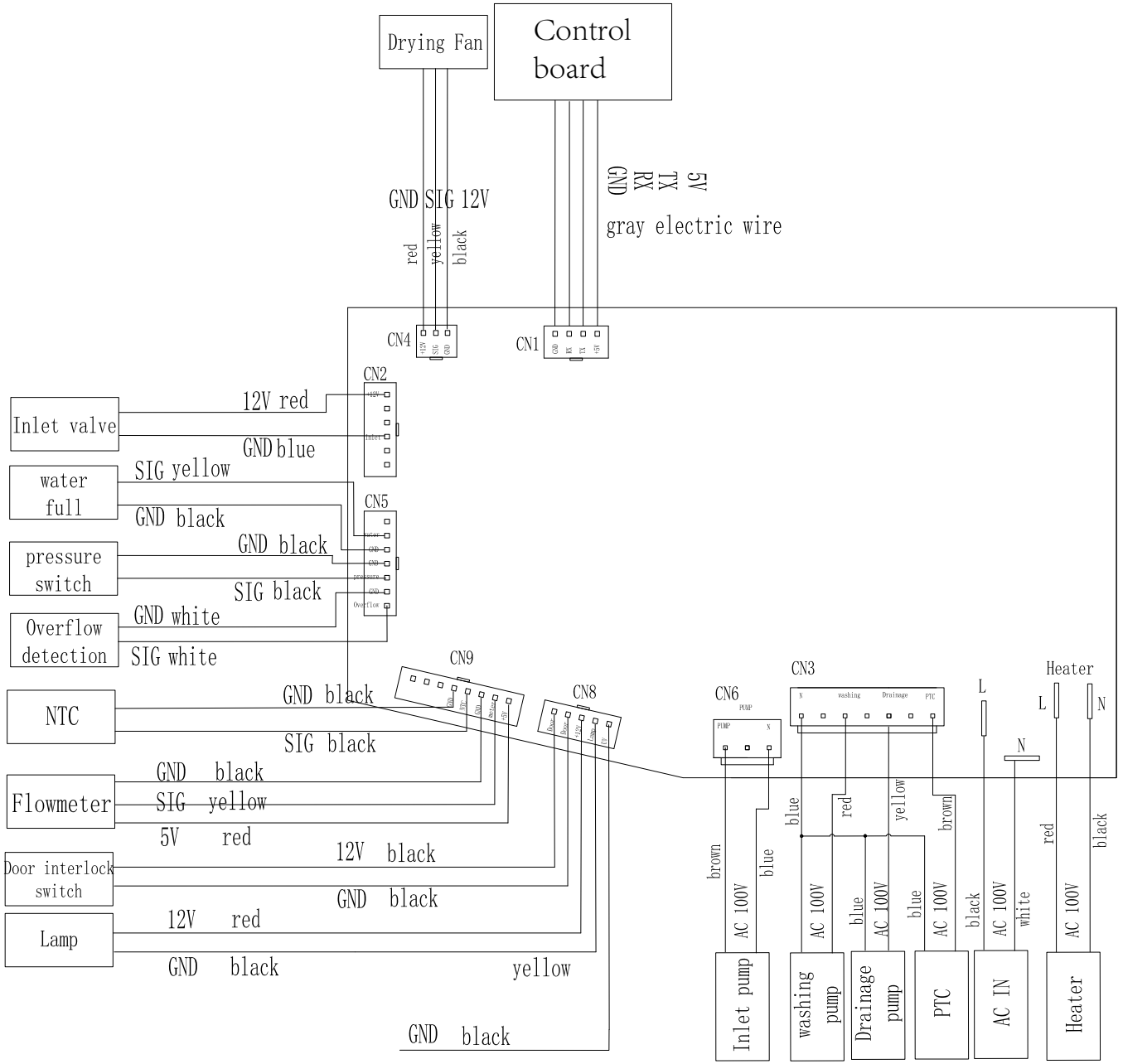

4.2. Connection Schematic

